iVAC System Setup of Single Dust Collector with more than 8 Tools

R5 - 20241021

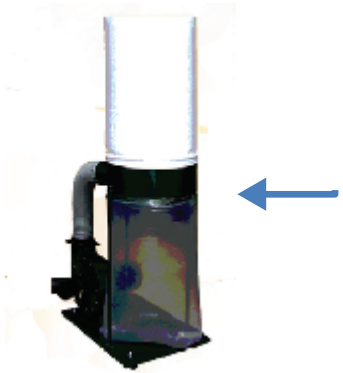

DC mfgr/model specific control switch

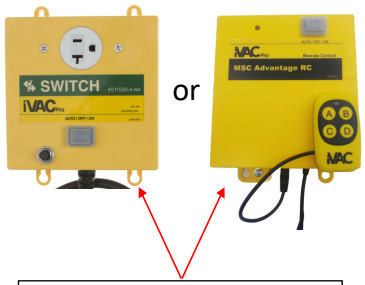

System Address : A

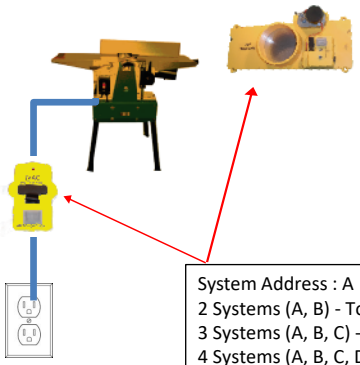

Blast Gate with System Address : A Tool Address : 1 will serve the One Gate Always Open feature .

System Address : A
2 Systems (A, B) - Tool Address : 1-7
3 Systems (A, B, C) - Tool Address : 1-6
4 Systems (A, B, C, D) - Tool Address : 1-5

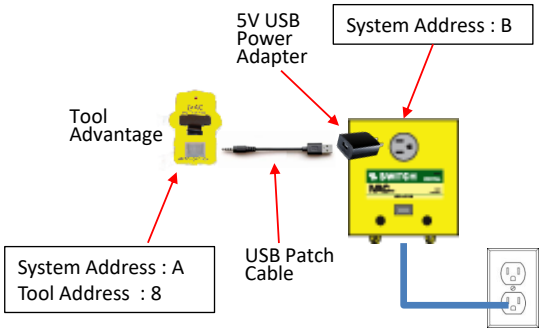

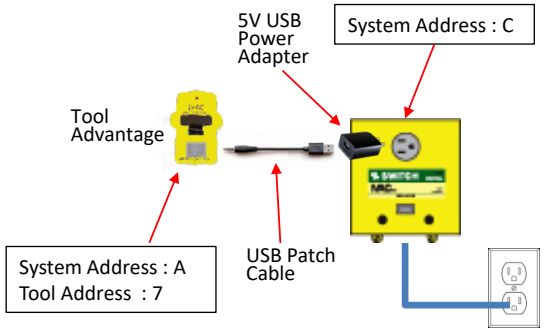

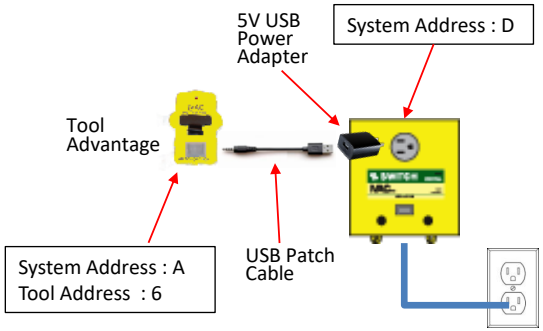

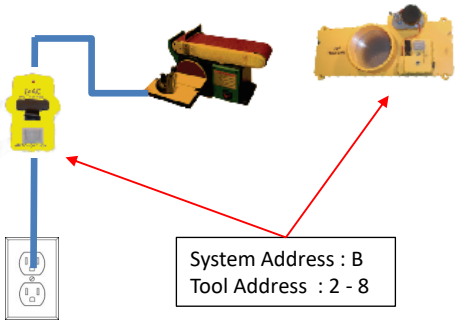

System Address : B
Tool Address : 2 - 8

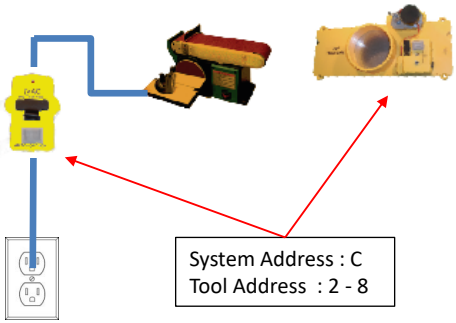

System Address : C
Tool Address : 2 - 8

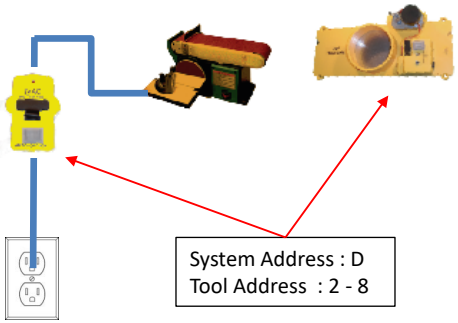

System Address : D
Tool Address : 2 - 8